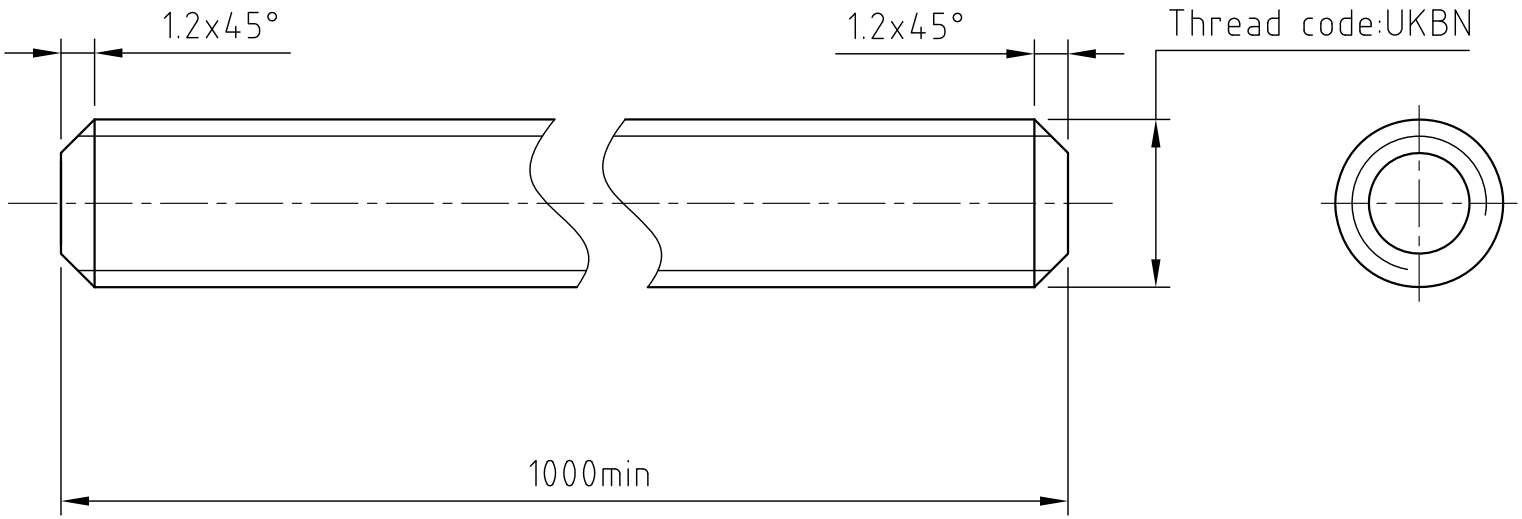

Thread code UKBN	
Thread type	ACME
Major diameter [mm]	6.223...6.350
Minor diameter [mm]	4.107...4.509
Lead	1.5875
Pitch	1.5875
Starts	1
Thread per inch	16

				Surface specification DIN ISO 1302	General tolerances DIN ISO 2768- mK	Work piece edge DIN ISO 13715	Scale:	
							Material: 1.4301	
				Nanotec® PLUG & DRIVE		Name	Date	THREADED SPINDLE
					DRN	L W	12.04.2018	
					CHKD	GYQ	12.04.2018	SCREW-AAA-UKBN-1000
REV	DESCRIPTION	DATE	DRN		APVD	P.R.	12.04.2018	